FYP Progress Meeting

Supervisor: Prof. AN Liang
Reporter: YIP Tsz Yeung Oscar, SEN Bijoy, ZHAO Xuecen
Date: 12th Feb 2026

THE HONG KONG POLYTECHNIC UNIVERSITY
香港理工大學

Outline

1. Personal progress
   - Jack(ME)
   - Oscar(BME)
   - Bijoy(EEE)
2. Team collaboration (Jack)
3. Purchase list (Bijoy)
4. Project timeline (Oscar)
5. Questions

2. Personal Task (Jack)

- **Design the passive fuel cell stack**
- **Calculate the suitable size and reaction area of the fuel cell.**
- **Examine fuel cell components.**
- **Integrate the fabricated components into a functional stack.**
- **Assembly of the toy car.**
- **Interactive webpage development.**
- **Train the AI model.**

*Part highlighted are the task that I was working on during these last month

Vandi full assembly

- Now equipped with Camera and radar
- Fully assembled and is ready for fuel tank deployment

3D printed prototype analyses

- Using PP material
- Printed in collaboration with Oscar
- The print failed at the circled section as PP is less stiff than PLA
- Overall print quality was low

Redesign

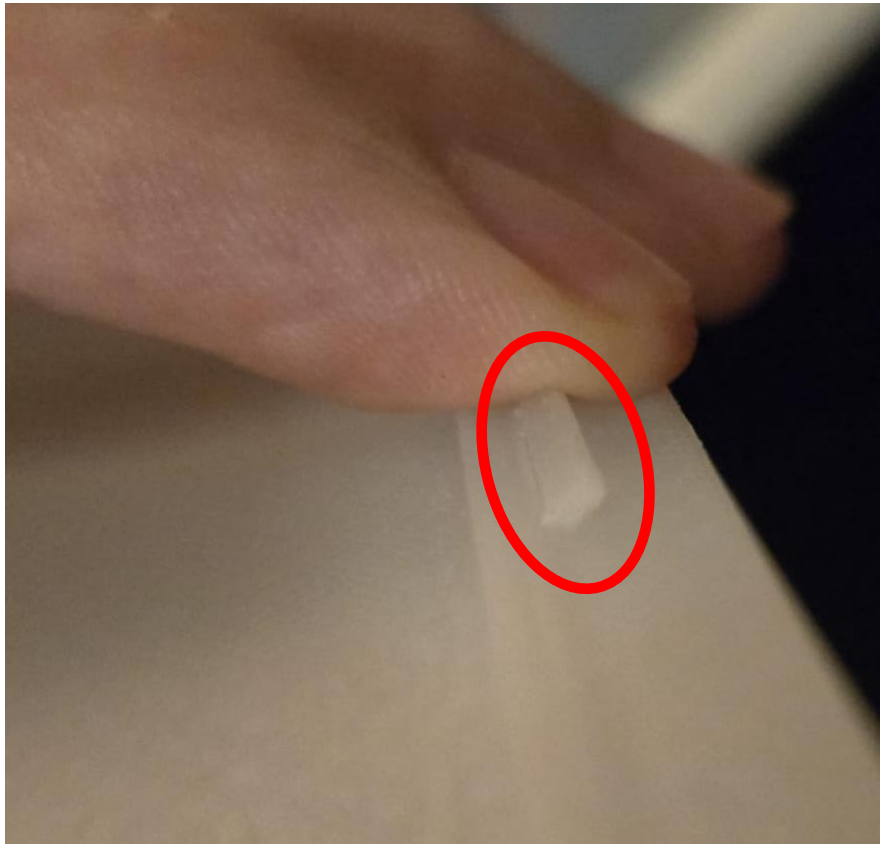

Previous fuel cell design analyses

- Disassemble and study the design of the old fuel cell
- Understand the structure of the MEA and current collector
- Reflect on the current design

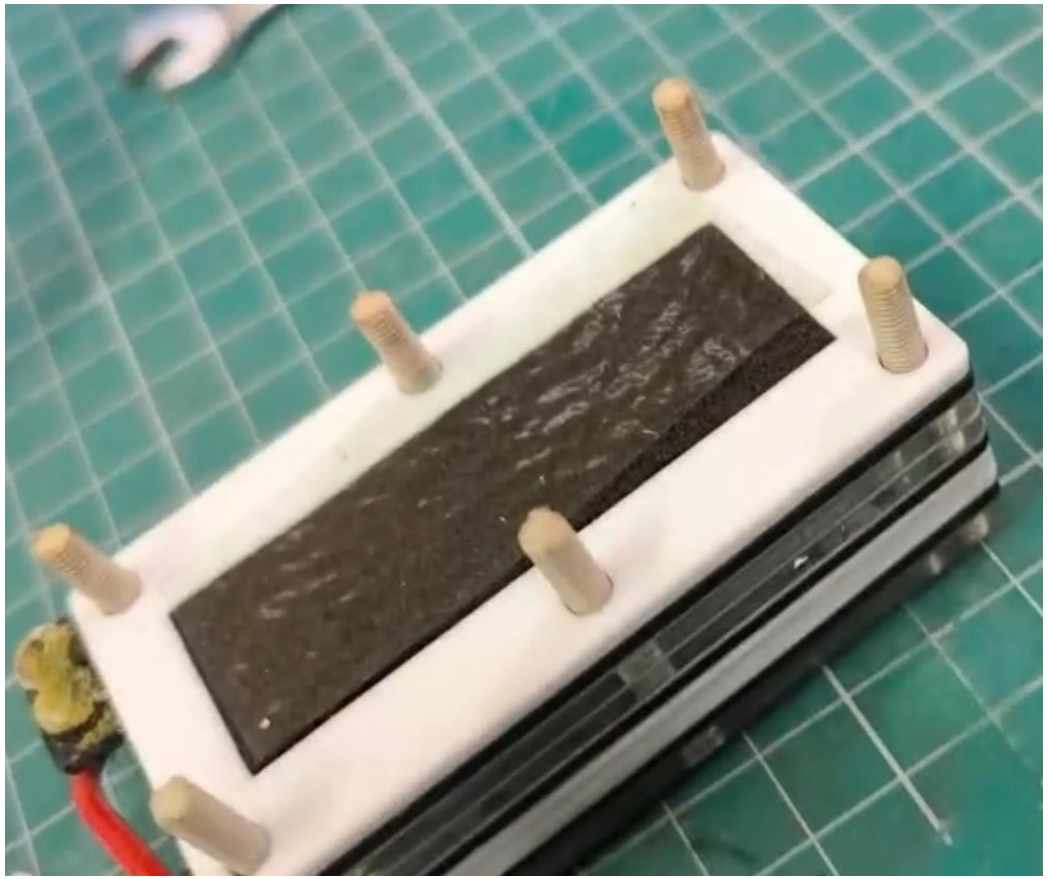

New Fuel cell design

- Better overall structure with more screws and better structure
- Newly designed current collector and gasket
- More screw holes for stronger fastening
- New current collector holder design for PP
- Move all the refueling hole to one side

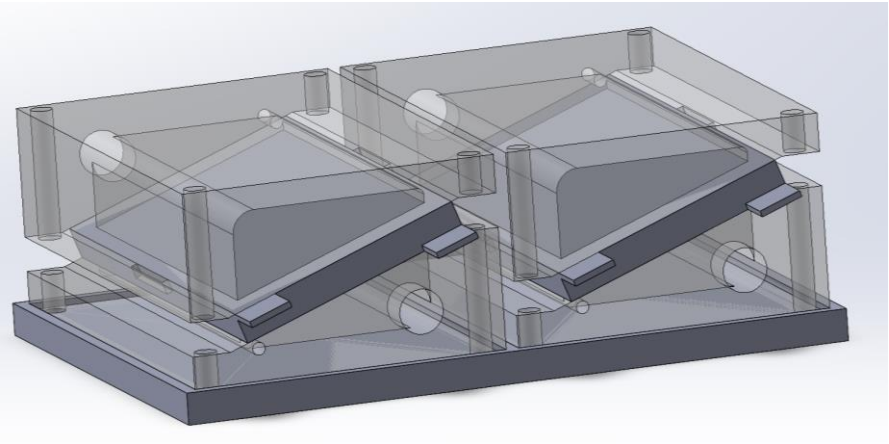

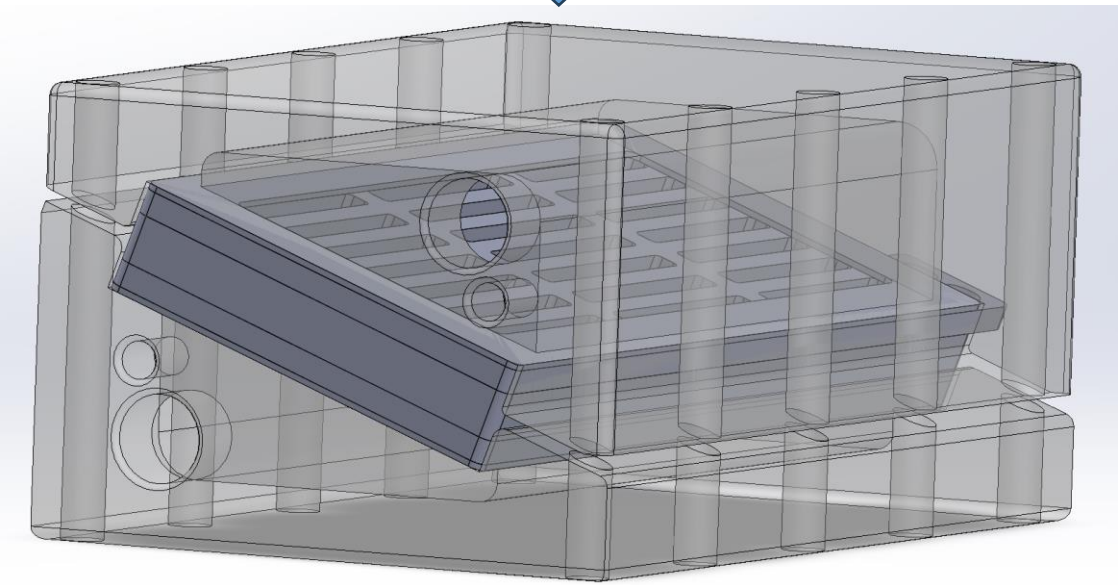

Work experience

- I have signed up for 3 job experience since December to help me gain more skills that is required for the project
- Orar (top): For advance application for Visual AI
- FunMa (bottom): For better understanding of UI(User interface) and UX(User experience)
- Dianya Technology: For IoT knowledge and implementation

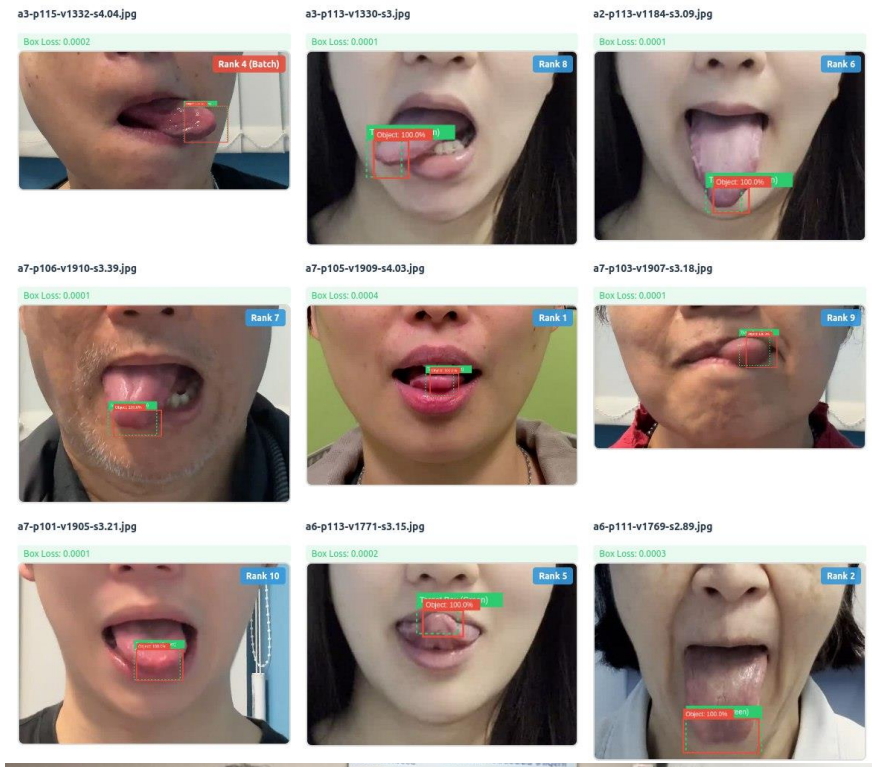

ZHAO Xuecen 22014303d

Interactive website redesign and AI program

Life Demo after the presentation

2. Personal Task (Oscar)

1. **Find manfacturer for 3-D printing**
2. **Parameters altering test**
3. **Corrosion test**

2. Personal Task (Oscar)

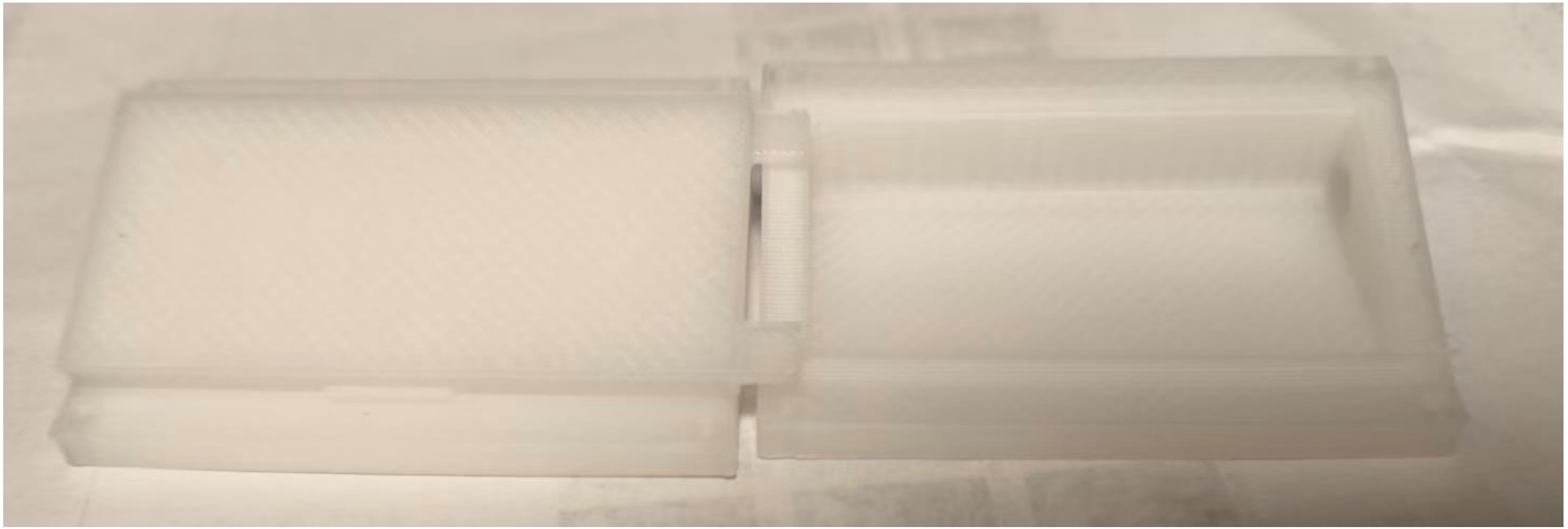

Fig.1 PP material prototype

2. Personal Task (Oscar)

Finish analysis the e-fuel performance

Only change concentration of Vanadyl sulfate solution

1. 0.6 M vanadyl sulfate solution with 3 M H_2SO_4
2. 0.8 M vanadyl sulfate solution with 3 M H_2SO_4

Only change the membrane of flow cell and stationary cell respectively

1. *NR 212 // N117*
2. *N117 // N117*

2. Analysis in January

Why not testing 1.2 M vanadyl sulfate solution?

Considering if vanadium solution are not optimized with additives

Cold temperature: crystallization

Hot temperature: precipitation

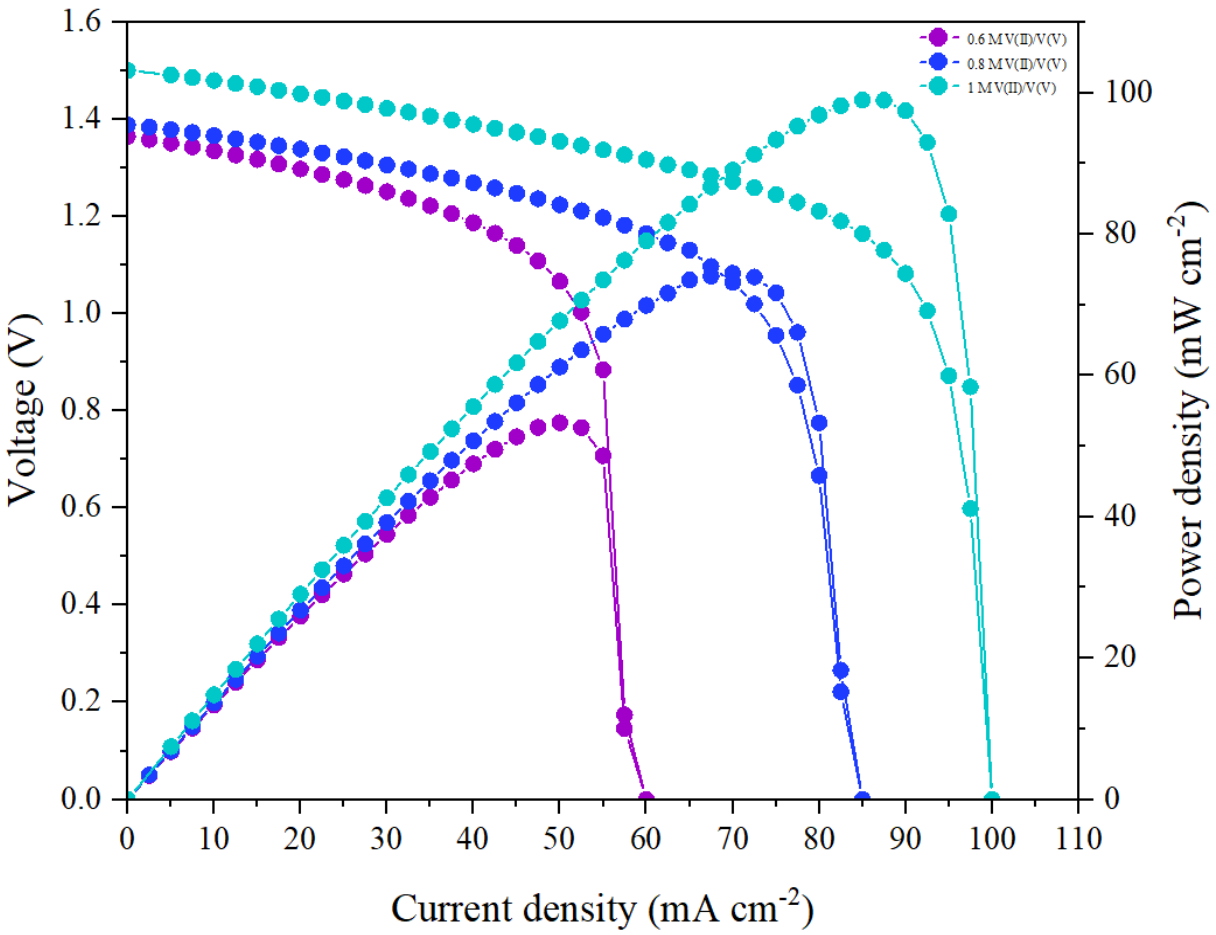

Fig.2 Effect of vanadium concentrations on cell performance

YIP Tsz Yeung 22077083D

2. Analysis in January (continue)

Analysis the e-fuel performance

The performance are the best when both the cells using NR 212 membrane

The performance are similar when we only change one membrane into N117

The performance are the worst, when using both the cell using N117 membrane

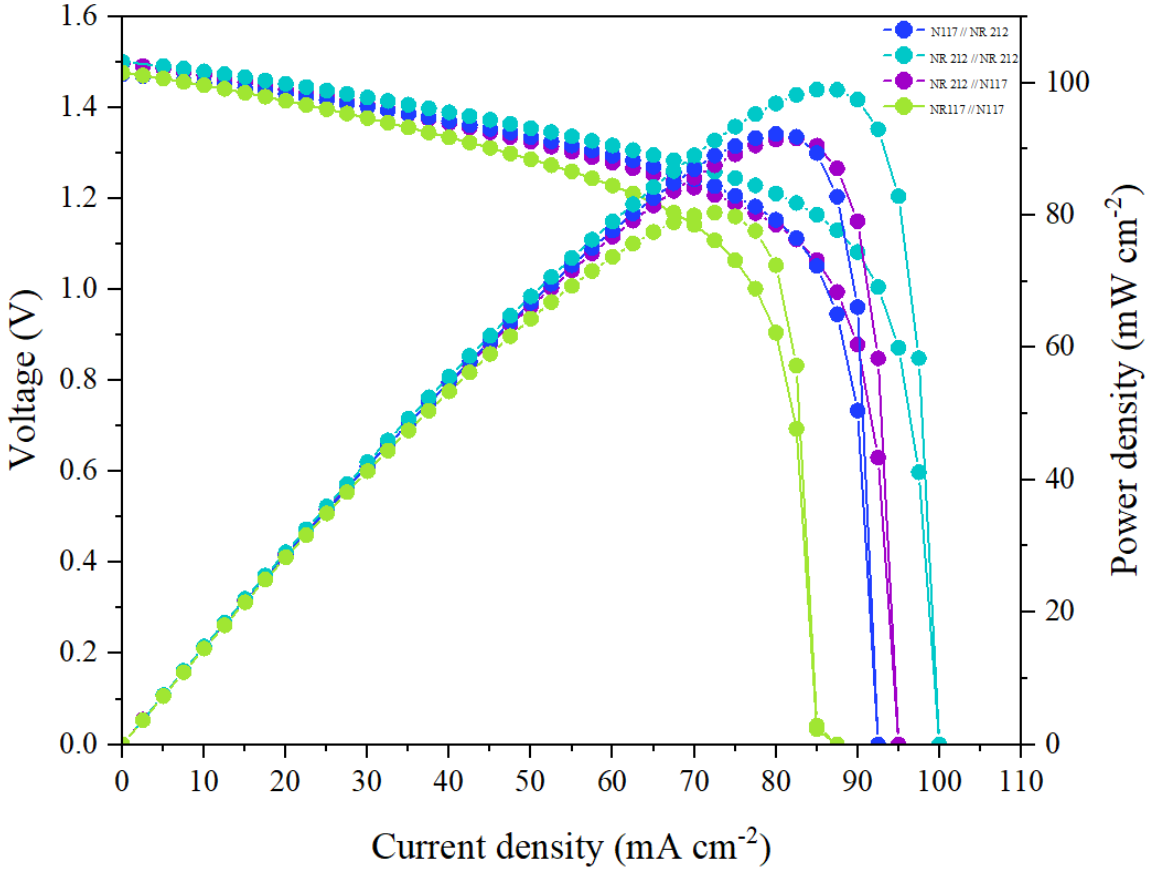

Fig.3 Effect of membrane on cell performance analysis

2. Corrosion test

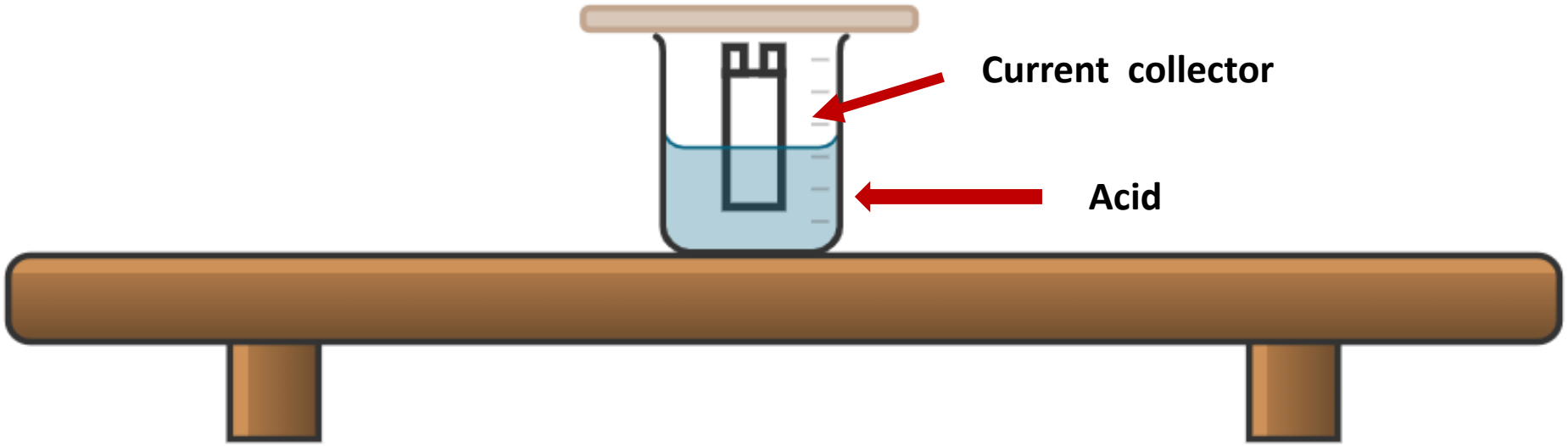

Fig.4 corrosion test demonstration

2. Corrosion test

96 hours

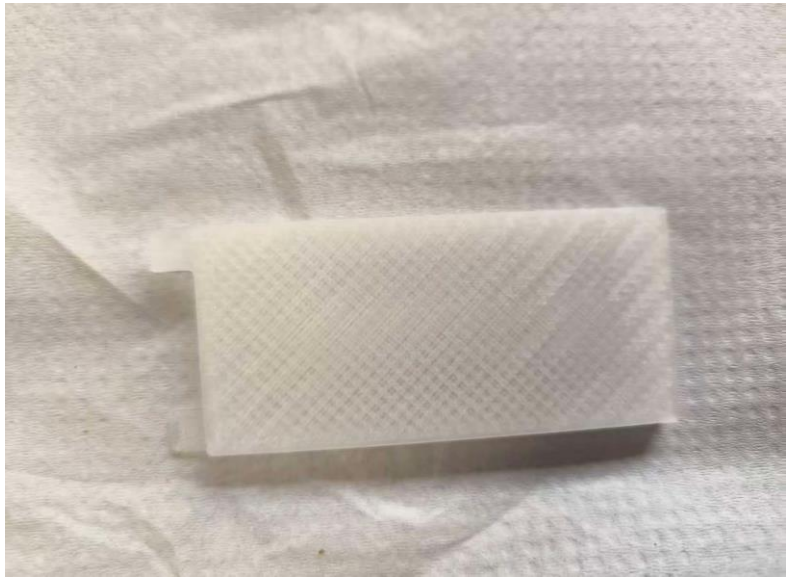

2. Video

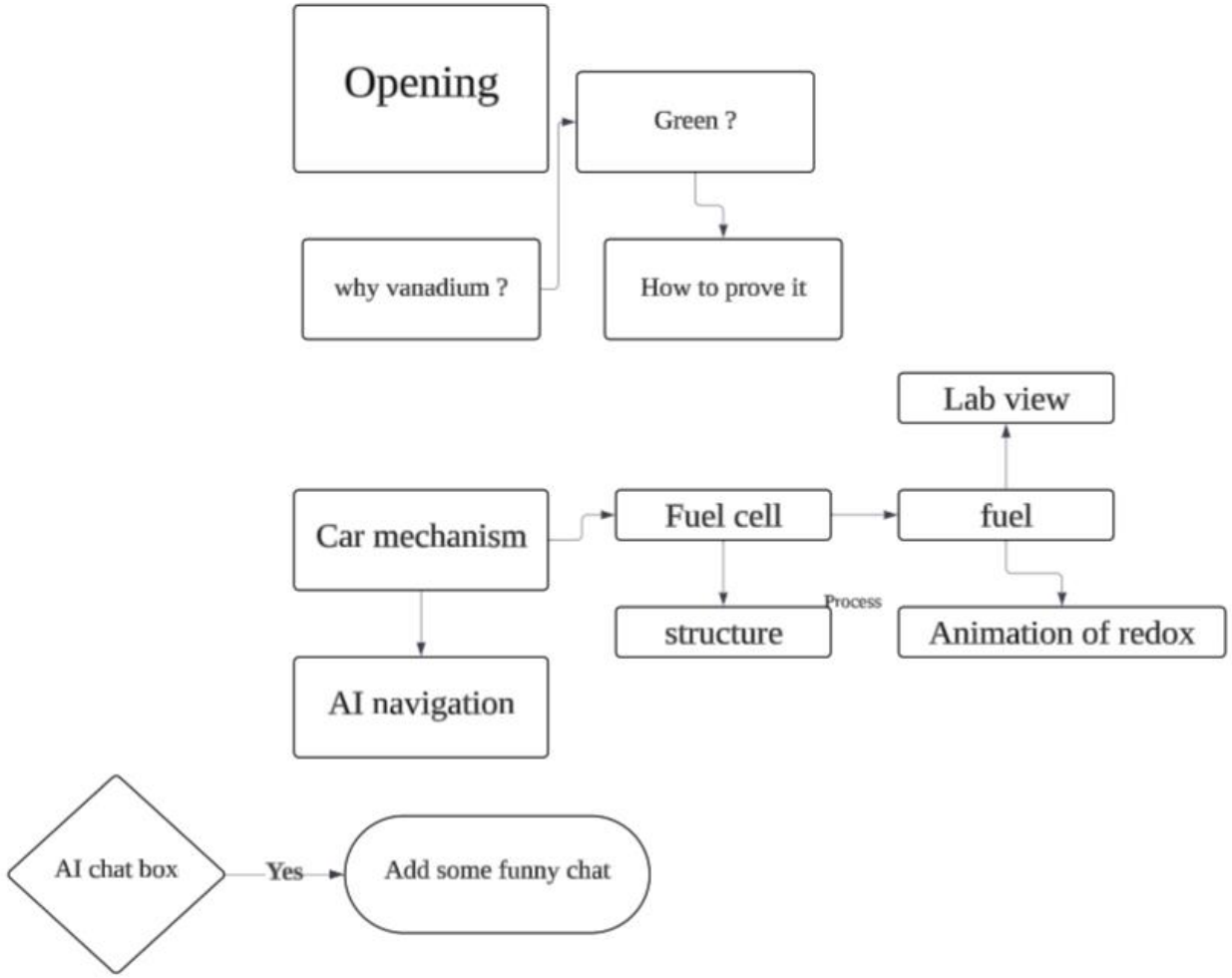
Opening
Green ?
why vanadium ?
How to prove it
Lab view
Car mechanism
Fuel cell
fuel
Process
structure
Animation of redox
AI navigation
AI chat box
Yes
Add some funny chat

2. Video (continue)

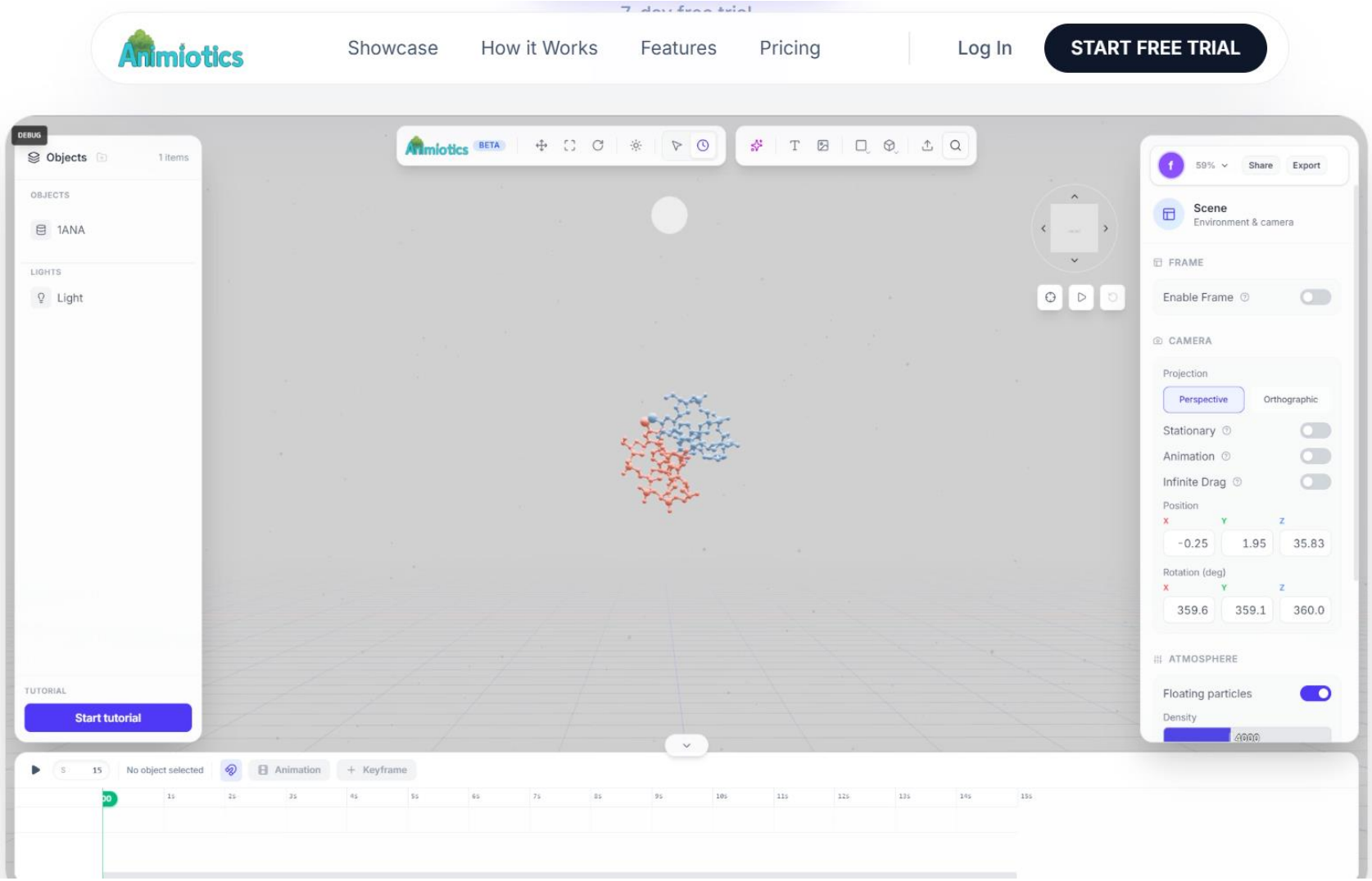

https://animiotics.com/

2. Video (continue)

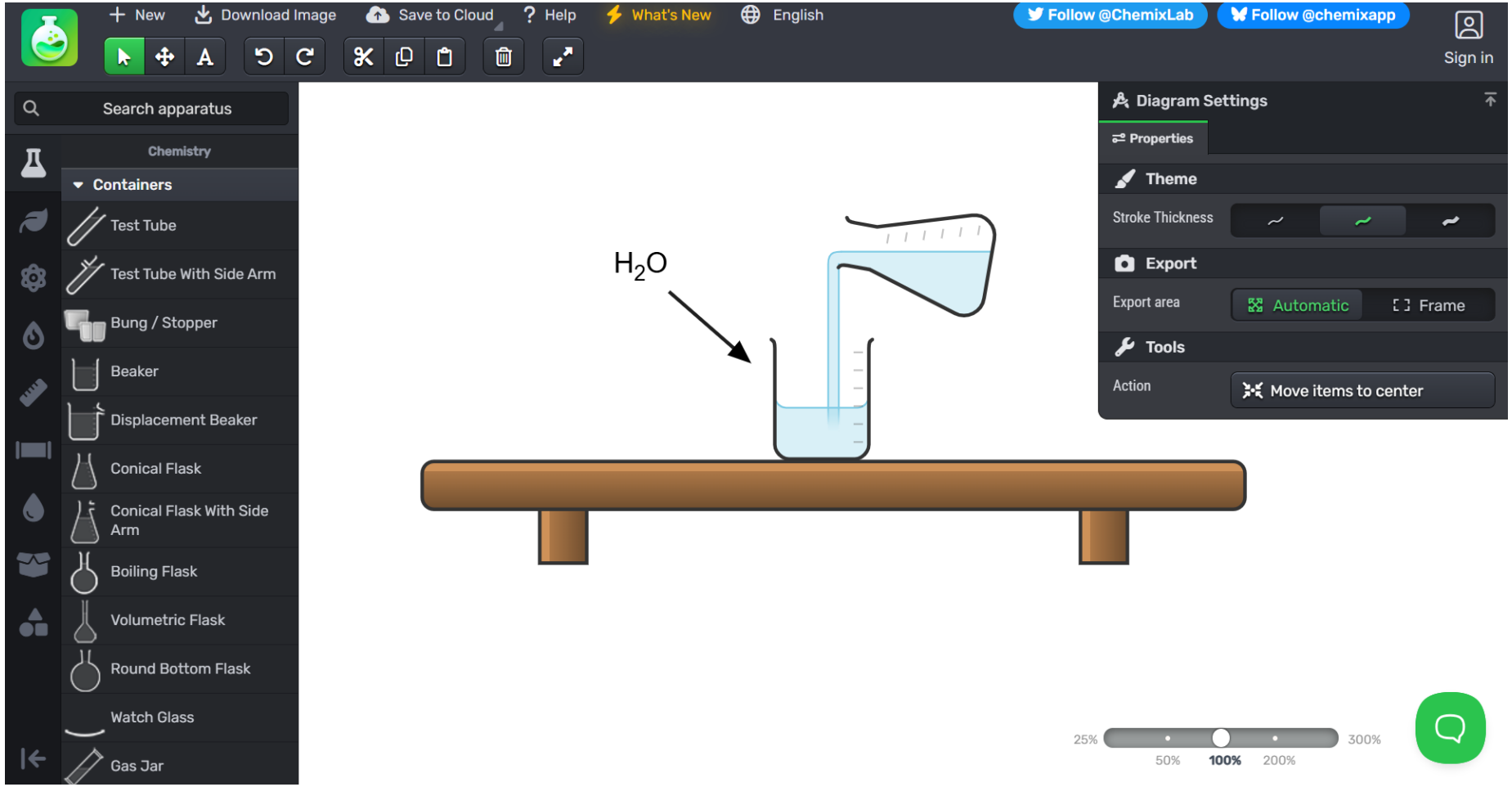

https://chemix.org/

YIP Tsz Yeung 22077083D

2. Personal Task (Bijoy)

- **Assemble the overall car**
- **Start collecting sample data**
- **Begin building the AI model**
- **Finish building the AI model**
- **Research on BMS, PMS and EMS**
- **Implement a small-scale BESS for the toy car**

- Highlighted parts are in progress

2. Personal Task (Bijoy)

- **Research and implement an EMS (Energy Management System)**

EMS Core Functions:

> **Load prediction** - Anticipates power requirements based on driving mode (autonomous navigation vs. idle)

> **Source selection** - Dynamically switches between fuel cell and battery to optimize efficiency

> **Power arbitration** - Manages peak loads during motor acceleration by drawing from both sources

> **Safety monitoring** - Continuous voltage/current/temperature surveillance with automatic shutdown triggers

2. Personal Task (Bijoy)

- **Implement on BMS, and PMS**

Core Responsibilities:

> **Boost converter** (1.4V → 12V) for fuel cell output during normal operation

> **Buck converters** (12V → 5V) for Jetson Nano and sensors

> **Automatic failover** - Seamless switchover to battery when fuel cell voltage drops below 1.2V or disconnects

> **Priority logic** - Fuel cell always preferred when available; battery reserved for backup

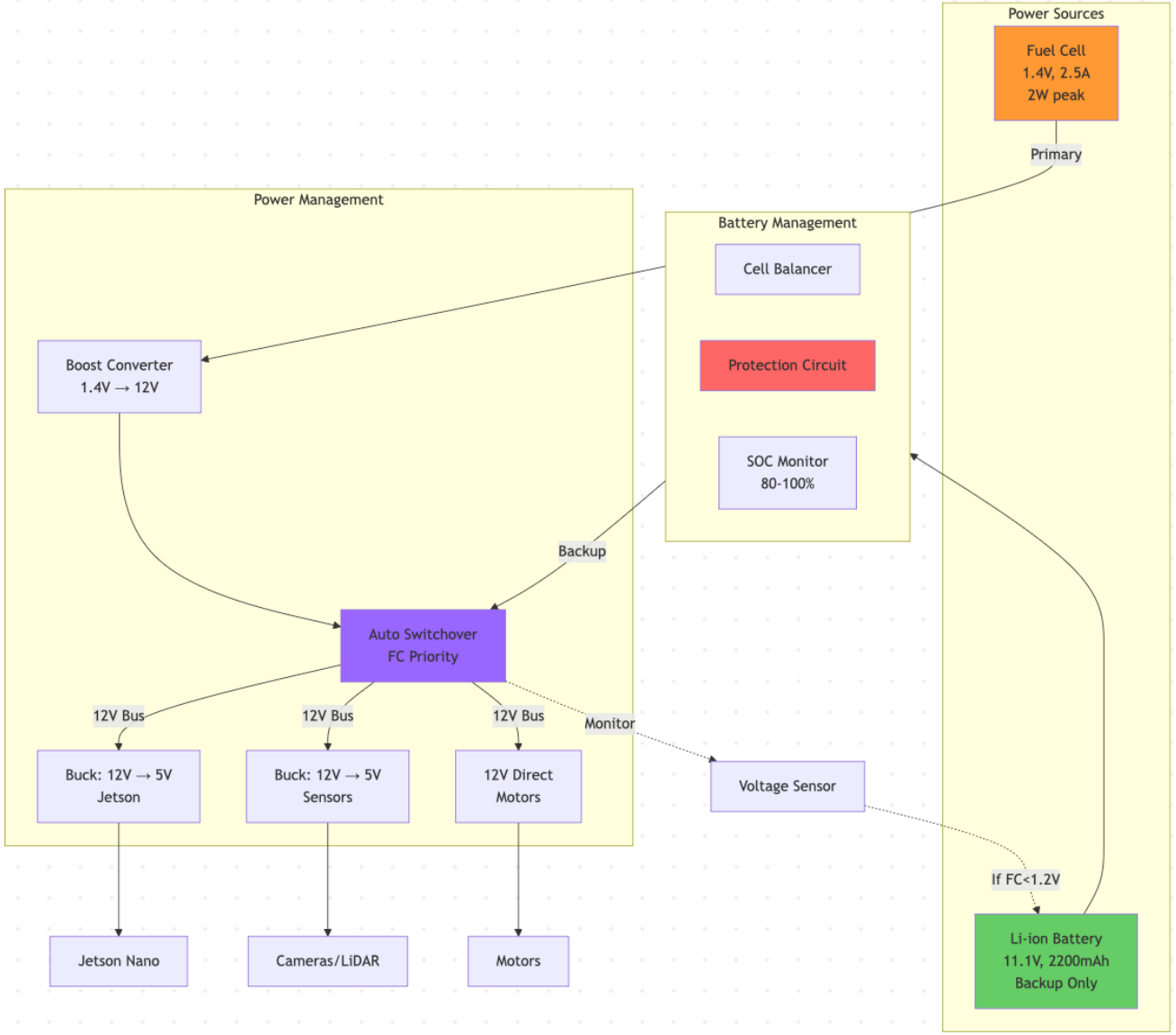

2. Personal Task (Bijoy)

- **Implement a small-scale BESS for the toy car**

Operational Modes:

Normal Mode: Fuel cell active → All systems powered → Battery at 100% standby

Backup Mode: Fuel cell depleted/disconnected → Automatic switch → Battery sustains operation

Recharge Mode: Fuel cell reconnected → System runs on FC → Battery recharges to 100%

Why This Matters: This architecture ensures **uninterrupted autonomous operation**.

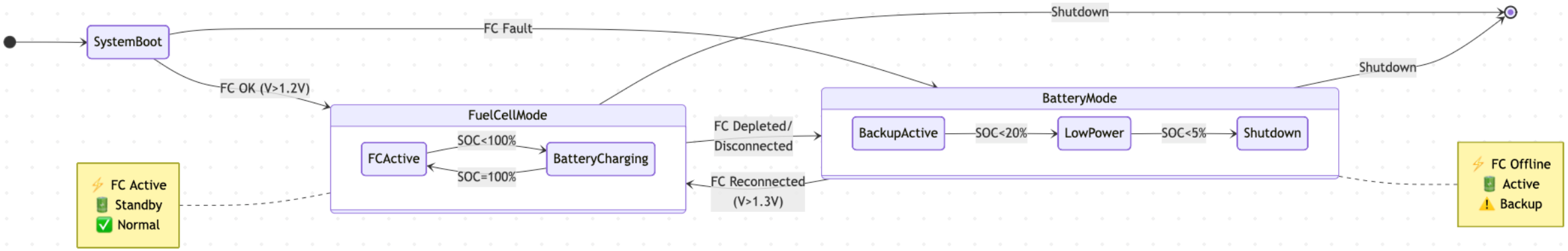

2. Personal Task (Bijoy)

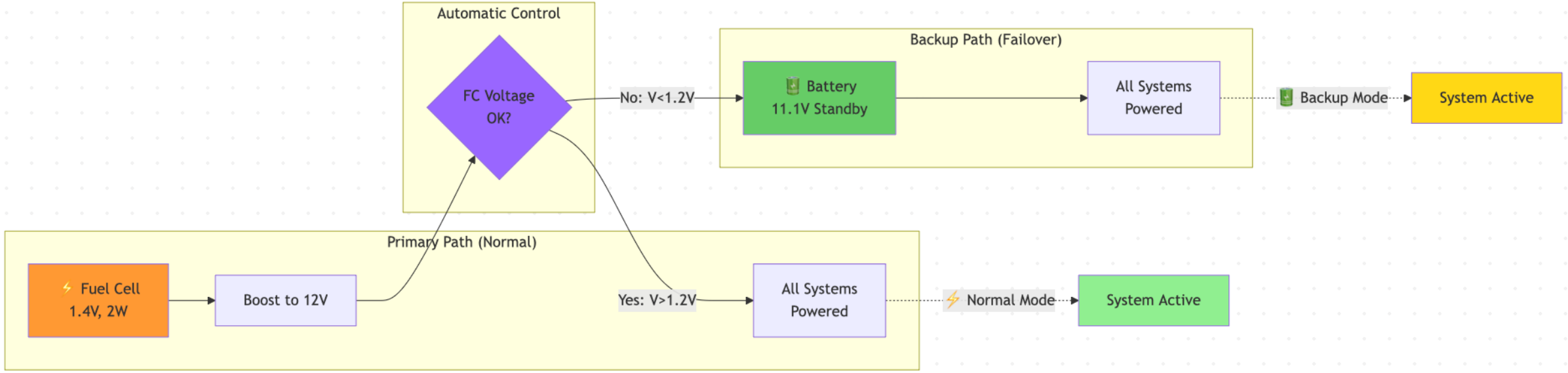

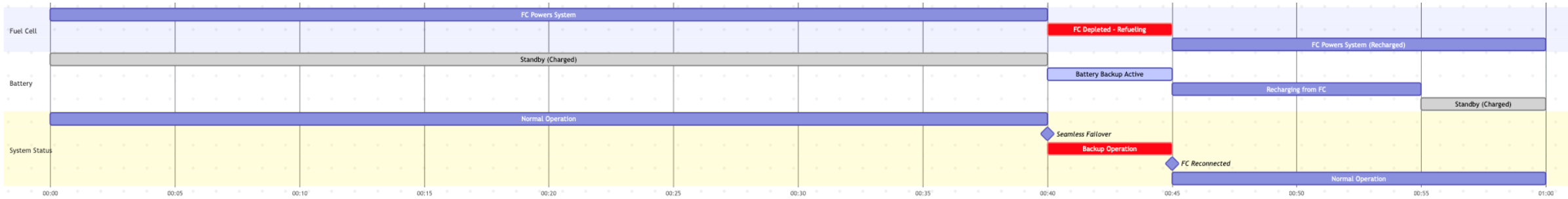

SEN Bijoy 22097037d

Project Timeline semester 2

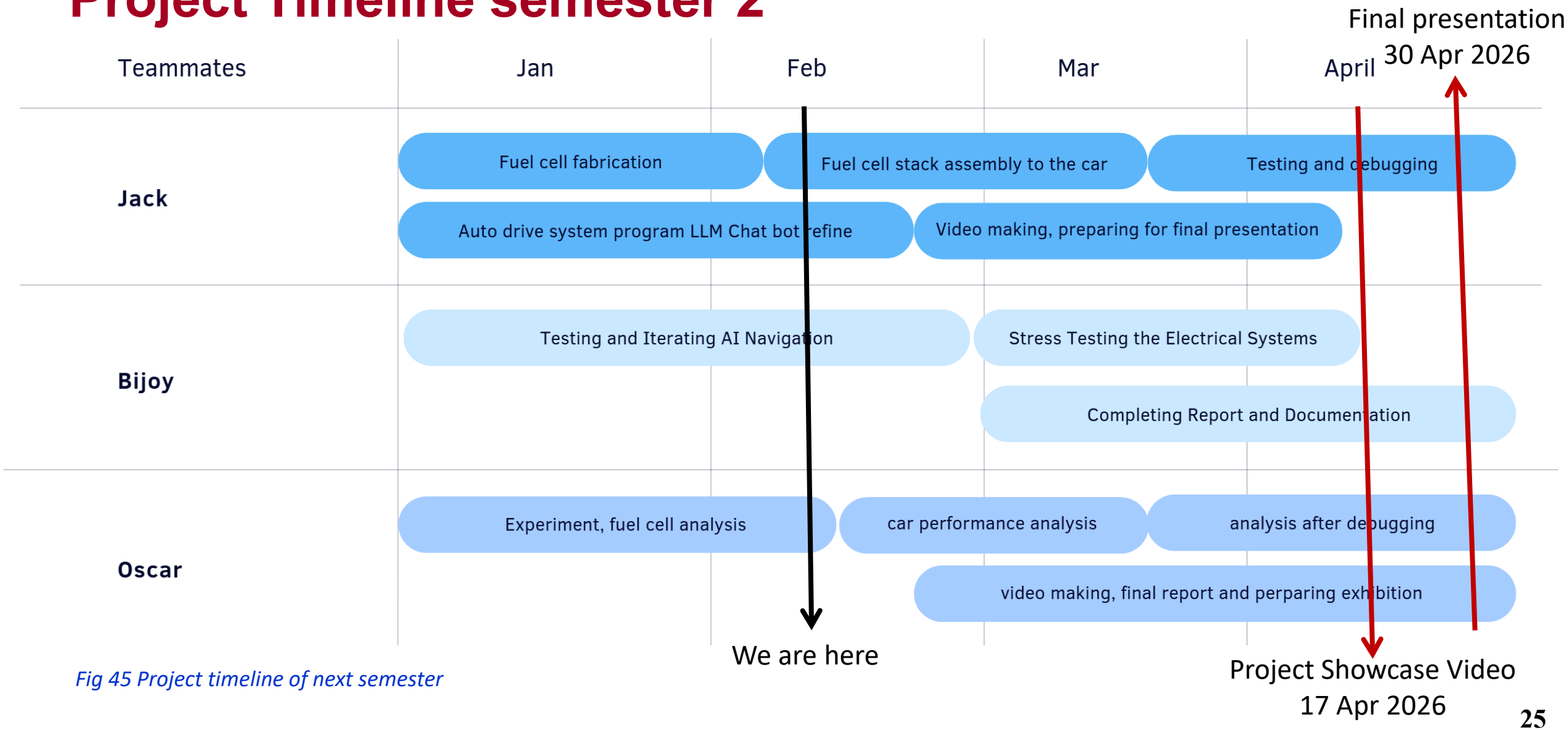

Fig 45 Project timeline of next semester

Thanks for your listening !